SPECIFICATION APPLIED

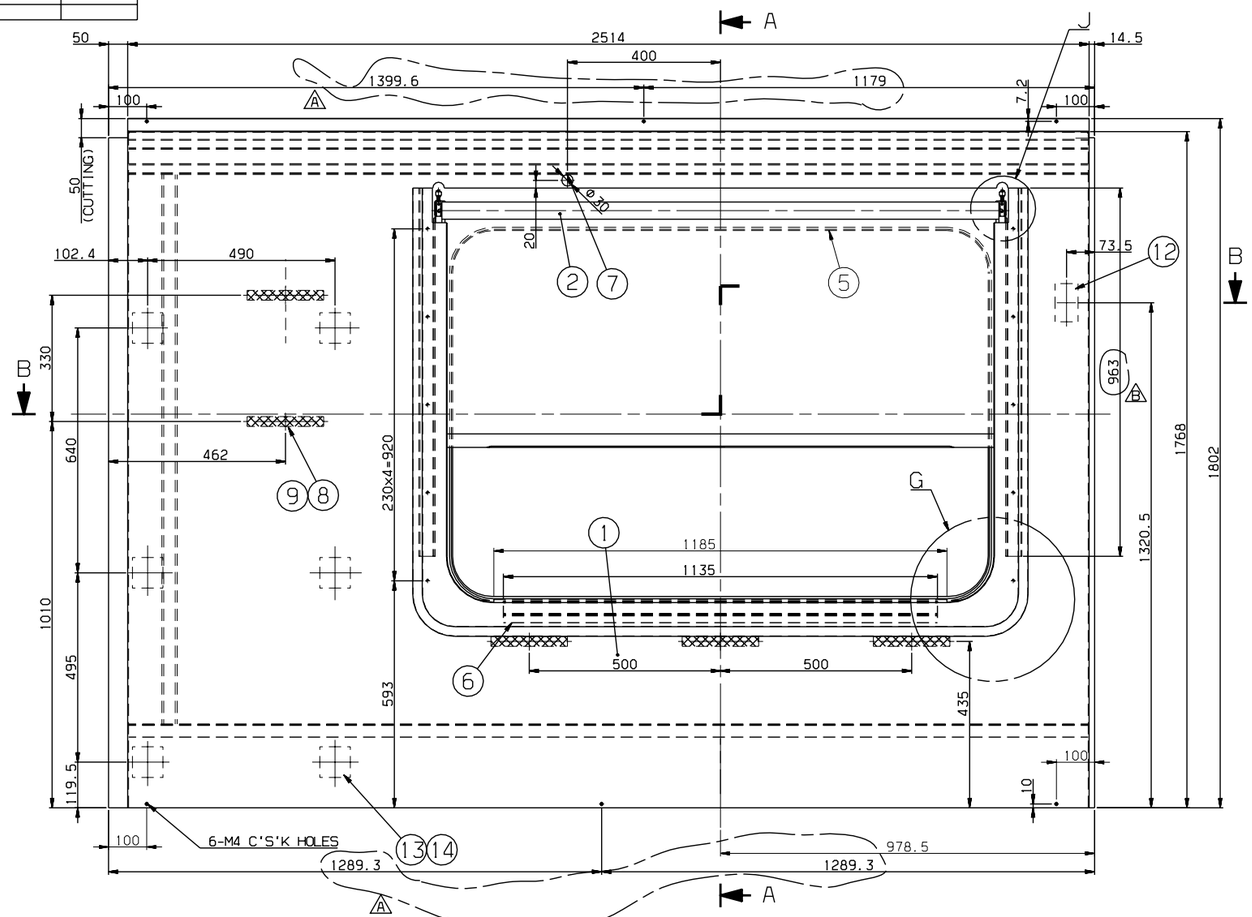

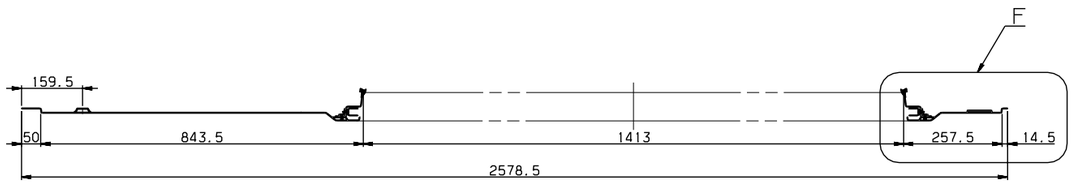

SECTION B-B

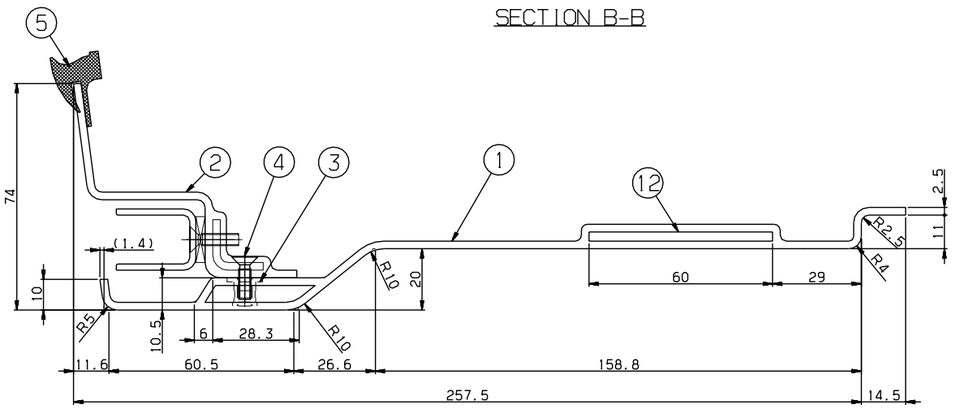

DETAIL F
SCALE=1/1

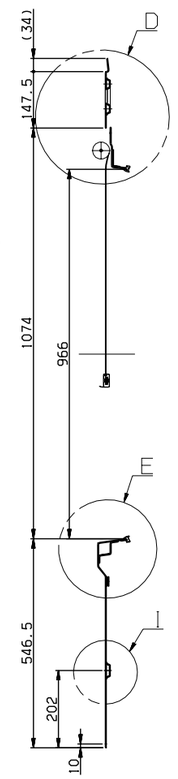

SECTION A-A

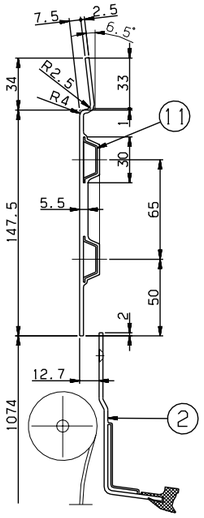

DETAIL D
SCALE=1/2

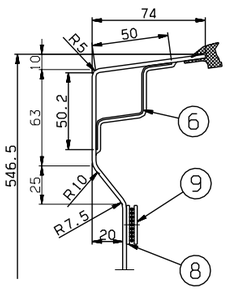

DETAIL E
SCALE=1/2

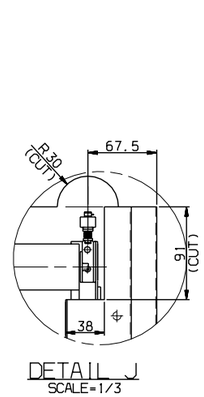

DETAIL J
SCALE=1/3

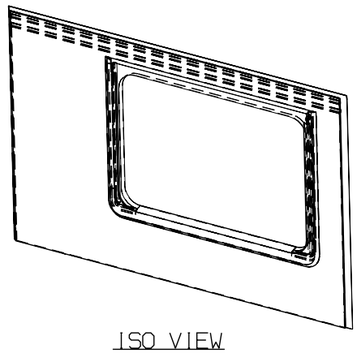

ISO VIEW

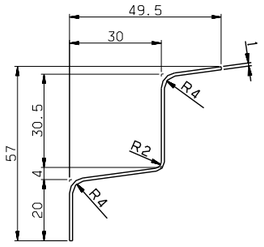

DETAIL #6
SCALE=1/1

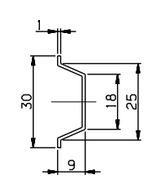

DETAIL #11
SCALE=1/1

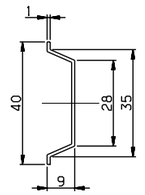

DETAIL #10
SCALE=1/1

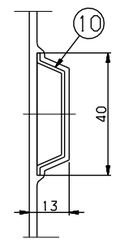

DETAIL I
SCALE=1/1

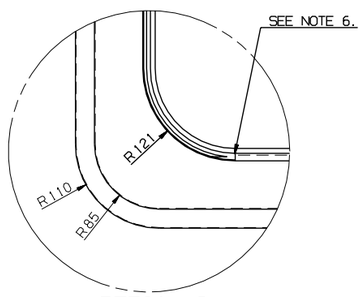

DETAIL G
SCALE=1/4

NOTE

1. AN INTERIOR PANEL'S COLOR(RAL 7047) AND SURFACE SHALL BE MANUFACTURED AFTER SAMPLE'S APPROVAL BY CUSTOMER
2. PART 5 SHALL BE CUT ADEQUATELY AND USED
3. PART 7 IS TO PROTECT.
4. PART 2 SHALL BE WELL OPERATED UNDER CONDITION OF ASSEMBLY
5. PART 8 SHALL BE FIXED ON THE PART 1, AND PART 9 SHALL BE DELIVERED SEPERATETLY
6. THE INTERFACE BETWEEN PART 1 AND PART 2 SHALL BE STRONGLY SEALED
7. PART 4 SHOULD BE APPLIED WITH PART 15.

NO.	PART NO.	DESCRIPTION				MATERIAL	Q'TY	W.T	REMARKS
15	CP910004-406	ADHESIVE		ASSY	1				LOCTITE 242
14	RFP51194EJ0-014	PACKING		CR	6				PL.T2x220x200 MS39000-004(SC70-F2(CR))
13	RFP51194EJ0-013	PACKING		CR	6				PL.T10x220x200 MS39000-004(SC70-F2(CR))
12	RFP51194EJ0-012	SEAT,TAP		SUS304	1				PL.T3x100x60
11	RFP51194EJ0-011	STIFFENER		A1050P	2				T1
10	RFP51194EJ0-010	STIFFENER		A1050P	2				T1
9	RFP51194EJ0-009	DUAL_LOCK,FASTENER		ASSY	5				3M,SJ-3550 L=200
8	RFP51194EJ0-008	DUAL_LOCK,FASTENER		ASSY	5				3M,SJ-3551 L=200
7	RFP90013AN0	RUBBER,BUSH		ASSY	1				G1,1623
6	RFP51194EJ0-006	STIFFENER		SUS304	1				T1,L=1135
5	RFP51194EJ0-005	RUBBER,SECTION		ASSY	1				RFP51011AN0,L=4600
4	RS60607-098S	SCREW,F.H		SUS304	10				M4x14
3	RFP51194EJ0-003	NUTSERT		SUS304	10				M4
2	RFP51009AN0	PANEL,BLIND WINDOW		ASSY	1				
1	RFP51194EJ0-001	PANEL		FRP	1				T2.5

승인 APP	설계 DGN	검도 CHK	제도 DRG
JeongYul Lee 2014.10.24	HeonUk Lee 2014.10.24	KeongBong Park 2014.10.24	HeeSook Jeong 2014.10.24

재질 MAT'L: ASSY
중량중 G.W
일반공차 MC B / VD B / CT B
SIZE A1

TITLE: WINDOW,MASK,TYPE JJ

DRG. NO: RFP51194EJ0 MS
Ver. 00 Rev. -B
SCALE 1/8
SHEET 1 of 1

RSD1402
RFP-
난-PRJT
설계분출 CATIA

HYUNDAI Rotem 현대로템주식회사

기호 MARK	일자 DATE	변경내역 DETAIL OF REVISION(E,C ZONE)	설변번호 E.C NO.	설계 DGN	검도 CHK	승인 APP
Bx3	2014.12.18	ADDED PART NO.#15 & DIMENSION	RSD1402-U071	H.U.LEE	K.B.PARK	J.Y.LEE
AX2	2014.11.30	ADDED DIM	RSD1402-U066	H.U.LEE	K.B.PARK	J.Y.LEE

REF. NO.

본 도면은 당사 재산권에 속하므로 무단복사/배포 금지됨. PROPERTY OF ISSUING ENTITY, CANNOT BE DISTRIBUTED OR REPRODUCED WITHOUT AUTHORIZATION.

구분			
일반 GENERAL	~40	2	4
	~30	2	3
	~10	1	1.5
용접 WELDING	≤3	0.5	1
절삭 MACHINING	~3150	-	7
	~1600	4	5
	~800	3	4
	~400	2	3
	~200	1.5	2
	~100	1	1.5

등급 GRADE	A	B
주강 CASTING		
~20M	8	14
~15M	7	12
~12M	6	10
~8M	5	8
~4M	4	6
~2M	3	4
~1M	2	3
~315	1	2
~120	1	2
~30	1	1

등급 GRADE	A	B	C
용접 WELDING			
~20M	-	6.0	8.0
~15M	-	5.0	7.0
~12M	-	4.0	6.0
~8M	-	3.0	5.0
~4M	0.8	2.0	4.0
~2M	0.5	1.2	3.0
~1M	0.3	0.8	2.0
~315	0.2	0.5	1.2
~120	0.15	0.3	0.8
~30	0.1	0.2	0.5
1~6	0.05	0.1	0.2

등급 GRADE	A	B	C
기계 가공품 MACHINING			
구십사이오 운군과사용 GENERAL TOLERANCE			